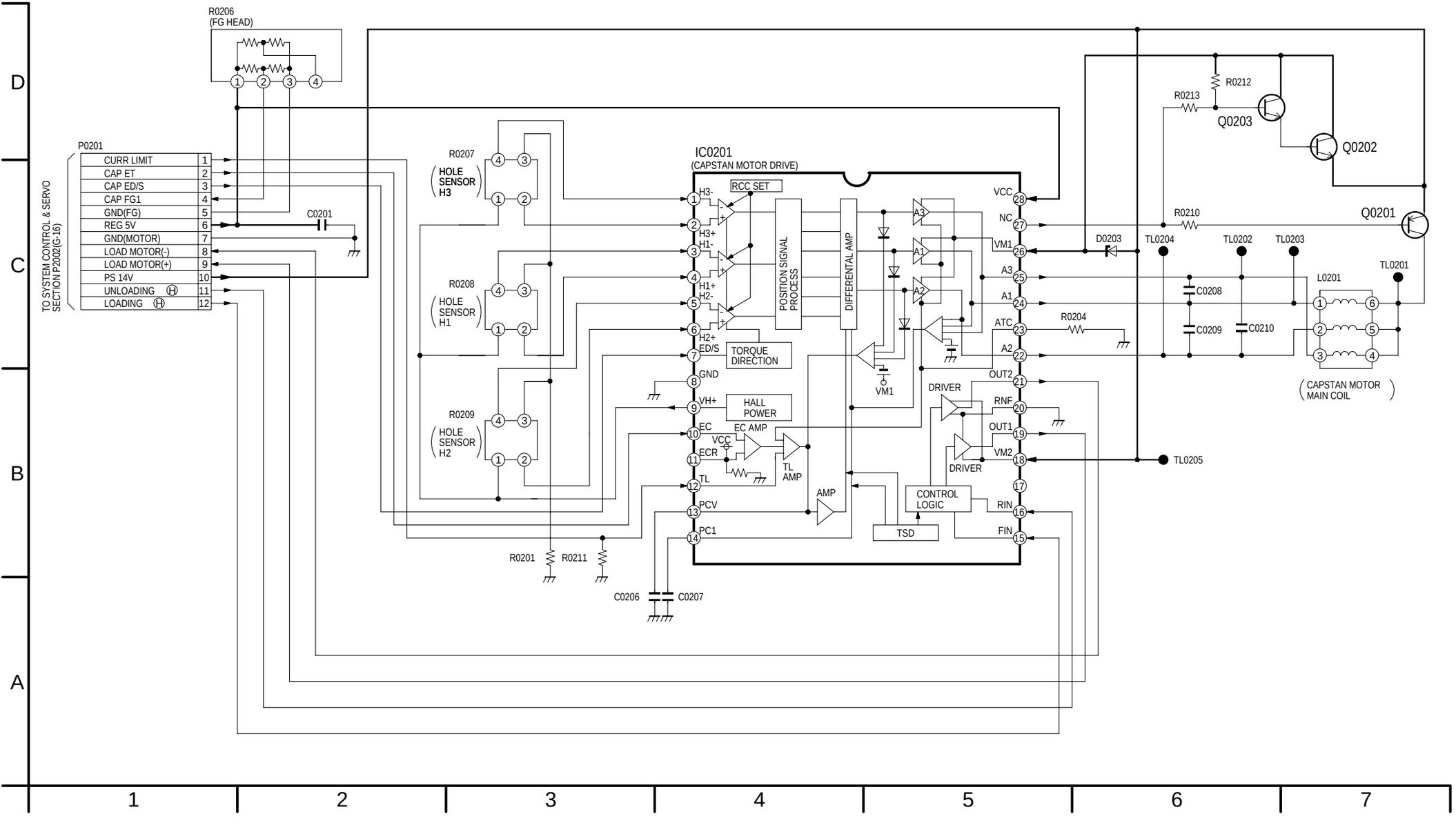
R0206
(FG HEAD)
P0201
CURR LIMIT
CAP ET
CAP ED/S
CAP FG1
GND(FG)
REG 5V
GND(MOTOR)
LOAD MOTOR(-)
LOAD MOTOR(+)
PS 14V
UNLOADING Ⓗ
LOADING Ⓗ
TO SYSTEM CONTROL & SERVO SECTION P2002(G-16)
C0201
R0207
HOLE SENSOR H3
R0208
HOLE SENSOR H1
R0209
HOLE SENSOR H2
IC0201
(CAPSTAN MOTOR DRIVE)
RCC SET
POSITION SIGNAL PROCESS
DIFFERENTAL AMP
TORQUE DIRECTION
HALL POWER
EC AMP
TL AMP
AMP
CONTROL LOGIC
TSD
DRIVER
VM1
H3-
H3+
H1-
H1+
H2-
H2+
ED/S
GND
VH+
EC
ECR
TL
PCV
PC1
VCC
NC
VM1
A3
A1
A2
ATC
OUT2
RNF
OUT1
VM2
RIN
FIN
R0201
R0211
C0206
C0207
R0212
R0213
Q0203
Q0202
Q0201
R0210
D0203
TL0204
TL0202
TL0203
TL0201
L0201
C0208
C0209
C0210
R0204
TL0205
CAPSTAN MOTOR MAIN COIL